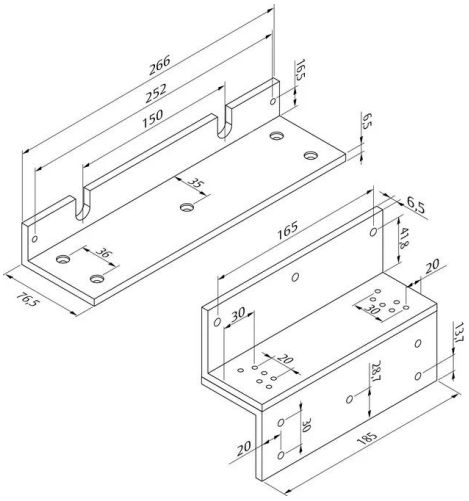

Z- mounting bracket kit

for maxi-magnets, Z-shaped

Product description

For mounting on flush-surface door elements.

Scope of delivery

- 1 piece magnet fixture and 1 piece counter plate bracket (Z-bracket)

Technical data

Dimensions	Width: 275 mm , Height: 75 mm
Mounting	square
Body material	Aluminium
Explosion-proof	No
Wall spacing	0 mm
Mounting method	Setup
Suitable for wall mounting	Yes

Article number	MAGAC-Z-AL1200-
EAN	4042203791862

ASSA ABLOY Sicherheitstechnik GmbH
Bildstockstraße 20, 72458 Albstadt
Tel. + 49 7431/123-0, Albstadt@assaabloy.com
www.assaabloy.com/de